Avery Weigh-Tronix

BSQ

DIGITAL BENCH BASE



High resolution robust bench base designed to give balance accuracy within an industrial environment.

Technical Specification

DESCRIPTION

The BSQ is a high resolution digital bench base with up to 1 billion internal count resolution. This digital bench base features the very latest, state of the art suspended Quartzell technology, guaranteeing repeatable balance accuracy at all times.

A rugged die cast, clam-shell case provides outstanding protection to the internally mounted Quartzell transducer.

Its spring suspension system protects the Quartzell transducer from damage and offers up to 1100% overload protection.

Weighing in oily environments:

Features built-in drip pathways to help channel all unwanted dirt and cutting fluids away from critical areas within the base.

Weighing hot items:

Offers an excellent thermal coupling barrier, enabling weighing of hot items while protecting against a thermal drift that could affect the accuracy of the base.

SPECIFICATIONS

GENERAL

Indicator Compatibility	ZM223 and ZM400 Series Indicators
Connectivity	Base connection to the indicator can be achieved by either RS232 to indicator or PC terminal (for custom application software only). 1 x RS232 (via a Keyed RJ45 socket). 1 x USB VCP
Base Communication	Count Data (SMA , 115200, 8 data bits, none, 1 stop bit) or PC terminal
Allowable Cable Length	RS232 up to 50 ft (15 M) USB up to 10ft (3 M)
Power	Base is powered from the indicator
Base Size & Max Capacity	10 to 70 lb (5-35 kg) Max 9"x 12" (230 mm x 305 mm) 10 to 70 lb (5-35 kg) Max 12"x 14" (305 mm x 355 mm) 70 to 150 lb (35-80 kg) Max 12"x 14" (305mm x 355 mm)
Displayed Resolution	Can resolve up to 10,000,000 divisions
Legal for Trade Resolution	10,000 divisions with up to 3 ranges available
Non Legal for Trade Resolution	100,000 divisions center of pan, stable room temperature
Readability	Up to 3,500,000 divisions
Internal Resolution	1 billion counts (1,000,000,000 counts)
Filter Setting	Controlled within the ZM indicator

BSQ DIGITAL BENCH BASES *Technical Specification*

GENERAL

Creep	0.001% of 100,000 divisions over a 30 minute time span or 0.0005% of 200,000 divisions over a 5 minute time span
Minimum Recommended Non Verifiable Division Size	0.00002 lb (0.01 g) for the 70 lb (35 kg) BSQ base 0.00005 lb (0.02 g) for the 175 lb (80 kg) BSQ Base
Minimum Allowed Verifiable Division Size (Class III)	0.002 lb (1 g) for the 70 lb (35 kg) BSQ Base (10,000d approved) 0.005 lb (2 g) for the 175 lb (80 kg) BSQ Base (10,000d approved)
Metrology Data	Stored within the indicator
Base Construction	Robust die cast clam shell base design with a centrally positioned suspended digital QDT cell with built-in anti-shock spring suspension, 4 adjustable anti-slip feet and a lipped stainless steel weigh platter
Loadcell Technology	High accuracy digital Quartzell transducer
Overload Protection	1100% overload protection based off the 150 lb / 80 kg base construction
Corner Loading	Spring breakaway system is activated at 120% full capacity or 60% corner only load
Operating Temperature	41° F to 104° F / +5° C to 40° C (approvals) at 10 to 90% humidity -4° F to 140° F / -20° C to 60° C (industrial) at 10 to 90% humidity
Foot Adjustment	Hard wearing anti-slip rubber foot with finger grip locking ring to allow up to 0.75" (19 mm) height adjustment
IP Rating	Designed to meet IP42
Carry Handles	Carry handles allow this scale base to be easily carried around

DIMENSIONS (inches)

Base Size	a	b	c	d	e (Max)	e (Min)	i	j	Weight
9" x 12"	13.00	12.00	9.00	9.50	5.75	5.02	10.00	7.00	11.2 lb
12" x 14"	14.50	13.50	12.00	12.50	5.86	5.12	11.50	10.00	15.5 lb

DIMENSIONS (millimeters)

Base Size	a	b	c	d	e (Max)	e (Min)	i	j	Weight
230mm x 305mm	330	305	228	241	146	128	254	178	5.1 kg
305mm x 350mm	368	343	305	318	149	130	292	254	7.0 kg

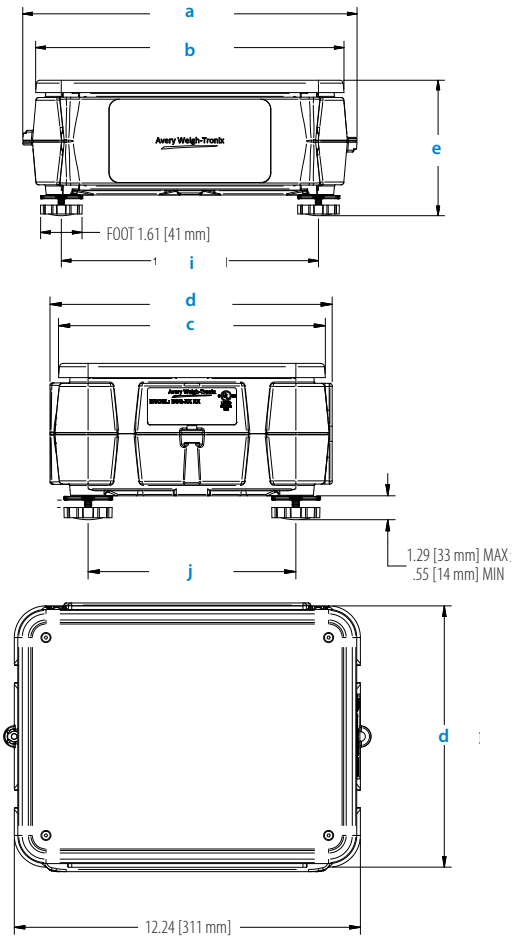

OPTIONS

Ball Top Option	Designed to fit on the 12" x 14" (305 mm x 355 mm) base this 10 ball stainless steel ball top makes it ideal to roll heavy boxes on and off the scale

APPROVALS

Agencies	NTEP (US) Class III/IIIL 10,000 d (CC# 15-028) Measurement Canada (AM-5985) OIML (European and UK) Class III 10,000 d EC* UL/c-UL-US **Pending*

Measurement Canada Approved AM-5985

OIML

UL US LISTED

Avery Weigh-Tronix

www.averyweigh-tronix.com

Avery Weigh-Tronix is an ITW company

Avery Weigh-Tronix is a trademark of the Illinois Tool Works group of companies whose ultimate parent company is Illinois Tool Works Inc ("Illinois Tool Works"). Copyright © 2026 Illinois Tool Works. All rights reserved. This publication is issued to provide outline information only and may not be regarded as a representation relating to the products or services concerned. This publication was correct at the time of going to print, however Avery Weigh-Tronix reserves the right to alter without notice the specification, design, price or conditions of supply of any product or service at any time.

BSQdigitalbase_spec_501488.indd
V4 AWT35-501488