Avery Weigh-Tronix

BSQ

LOW CAPACITY DIGITAL BENCH BASES



High resolution, robust bench bases designed to give balance accuracy within an industrial environment.

Technical Specification

DESCRIPTION

The 2 lb and 10 lb (1 kg and 5 kg) BSQ is a high resolution, digital bench base with up to 1 billion internal count resolution, a readability of over 2.5 million divisions. This robust digital bench base features some of the very latest, state of the art suspended Quartzell technology, guaranteeing repeatable balance accuracy at all times.

A rugged die-cast, clamshell case provides outstanding protection to the internally mounted Quartzell transducer. Its specially designed suspension system protects the Quartzell transducer from damage and offers up to 1100% overload protection.

Weighing in oily environments

Features built-in drip pathways to help channel all unwanted dirt and cutting fluids away from critical areas within the base.

Optional draft shield

A draft shield option allows increased accuracy when weighing minute items.

Optional underhook

A quick-fit underhook enables items to be suspended under the bench base, for density weighing applications.

SPECIFICATIONS

GENERAL

Indicator Compatibility	ZM223 and ZM400 Series Indicators
Connectivity	Base connection to the indicator can be achieved by either RS232 to indicator or PC terminal (for custom application software only). 1 x RS232 (via a Keyed RJ45 socket). 1 x USB VCP
Base Communication	Count Data (SMA , 115200, 8 data bits, none, 1 stop bit) or PC terminal
Allowable Cable Length	RS232 up to 50 ft (15 M) USB up to 10 ft (3 M)
Power	Base is powered from the indicator
Base Size & Max Capacity	From 0.2 lb to 2 lb (100 g to 1000 g) 9" x 12" (230 mm x 305 mm) base housing with a 6" (156 mm) dia. weight platter From 1 lb to 10 lb (500 g to 5000 g) 9" x 12" (230 mm x 305 mm) base housing with a 6" (156 mm) dia. weight platter
Displayed Resolution	Can resolve up to 10,000,000 divisions
Legal for Trade Resolution	2 lb (1 kg) base: 10,000 divisions single range with a min 0.00002 lb / 0.1 g (not OIML approved) 10 lb (5 kg) base: 10,000 divisions 3 range with a min 0.00002 lb / 0.1 g
Non Legal for Trade Resolution	100,000 divisions center of pan, stable room temperature
Readability	2 lb (1 kg) base: up to 2,000,000 divisions 10 lb (5 kg) base: up to 2,500,000 divisions
Internal Resolution	1 billion counts (1,000,000,000 counts)
Filter Setting	Controlled within the ZM indicator

BSQ LOW CAPACITY DIGITAL BENCH BASES *Technical Specification*

GENERAL

Creep	0.001% of 100,000 divisions over a 30 minute time span or 0.0005% of 200,000 divisions over a 5 minute time span
Minimum Recommended Non Verifiable Division Size	0.000001 lb (0.0005 g) for the 2 lb (1 kg) BSQ base 0.000005 lb (0.002 g) for the 10 lb (5 kg) BSQ base
Minimum Allowed Verifiable Division Size (Class III)	0.0002 lb (0.1 g) for the 2 lb (1 kg) BSQ base (10,000d approved) single range 0.0002 lb (0.1 g) for the 10 lb (5 kg) BSQ base (10,000d approved) 3 multi range
Metrology Data	Stored within the indicator
Base Construction	Robust die-cast clamshell base design with a centrally positioned suspended digital QDT cell with built-in anti-shock flex suspension, 4 adjustable anti-slip feet and a lipped stainless steel weigh platter
Loadcell Technology	High accuracy digital Quartzell transducer
Overload Protection	1100% overload protection based off the 10 lb (5 kg) construction
Operating Temperature	41° F to 104° F / +5° C to 40° C (approvals) at 10 to 90% humidity -4° F to 140° F / -20° C to 60° C (industrial) at 10 to 90% humidity
Foot Adjustment	Hard wearing anti-slip rubber foot with finger grip locking ring to allow up to 0.75" (19 mm) height adjustment
IP Rating	Designed to meet IP42
Carry Handles	Carry handles allow this scale base to be easily moved

OPTIONS

Draft Shield	2-10 lb (1-5 kg), allows access from all 4 sides
Underhook	Only available on the 2 -10 lb (1-5 kg) versions
Base Column	15" or 23" high ZM indicator to BSQ base column

APPROVALS

Agencies	NTEP (US) Class III/IIIL 10,000 d (CC# 15-028) Measurement Canada (AM-5985) OIML (European and UK) Class III 10,000 * EC* UL/c-UL-US **Pending*

Measurement Canada Approved AM-5985

DIMENSIONS (inches)

					Max	Min	Max	Min			Max	Min			Max	Min	
Base Size	a	b	c	d	e		f		g	h	k		l	m	n		o
9" x 12"	13.50	10.00	9.50	7.00	5.58	4.85	15.70	15.00	8.70	1.61	6.25	5.50	0.75	5.50	8.20	7.45	6

DIMENSIONS (millimeters)

					Max	Min	Max	Min			Max	Min			Max	Min	
Base Size	a	b	c	d	e		f		g	h	k		l	m	n		o
230mm x 305mm	343	254	241	241	178	123	399	381	221	41	159	140	19	140	208	189	152

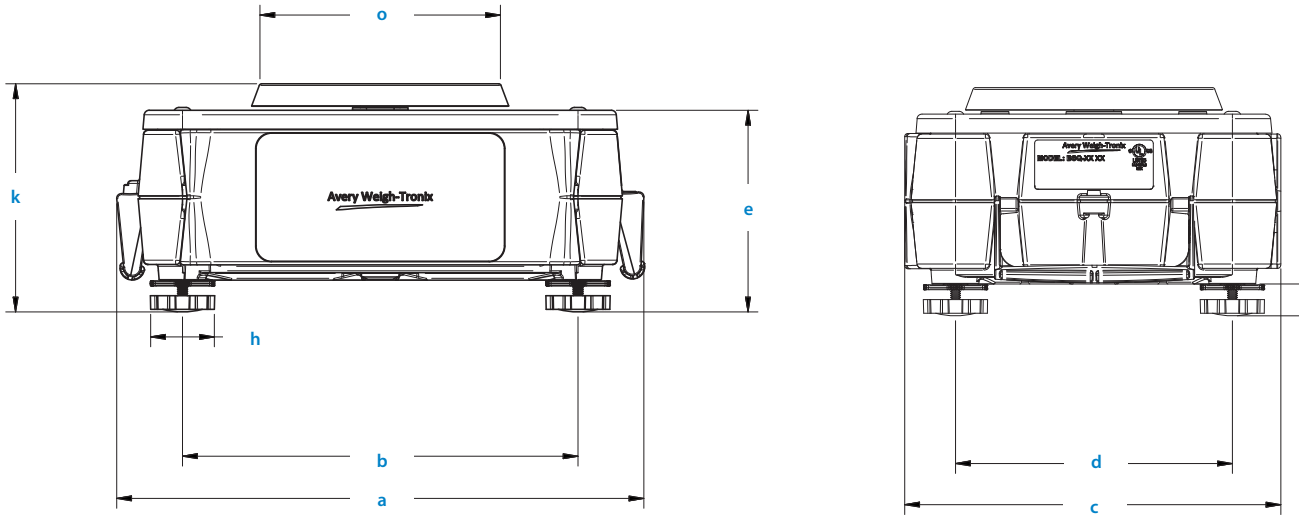

DRAFT SHIELD OPTION

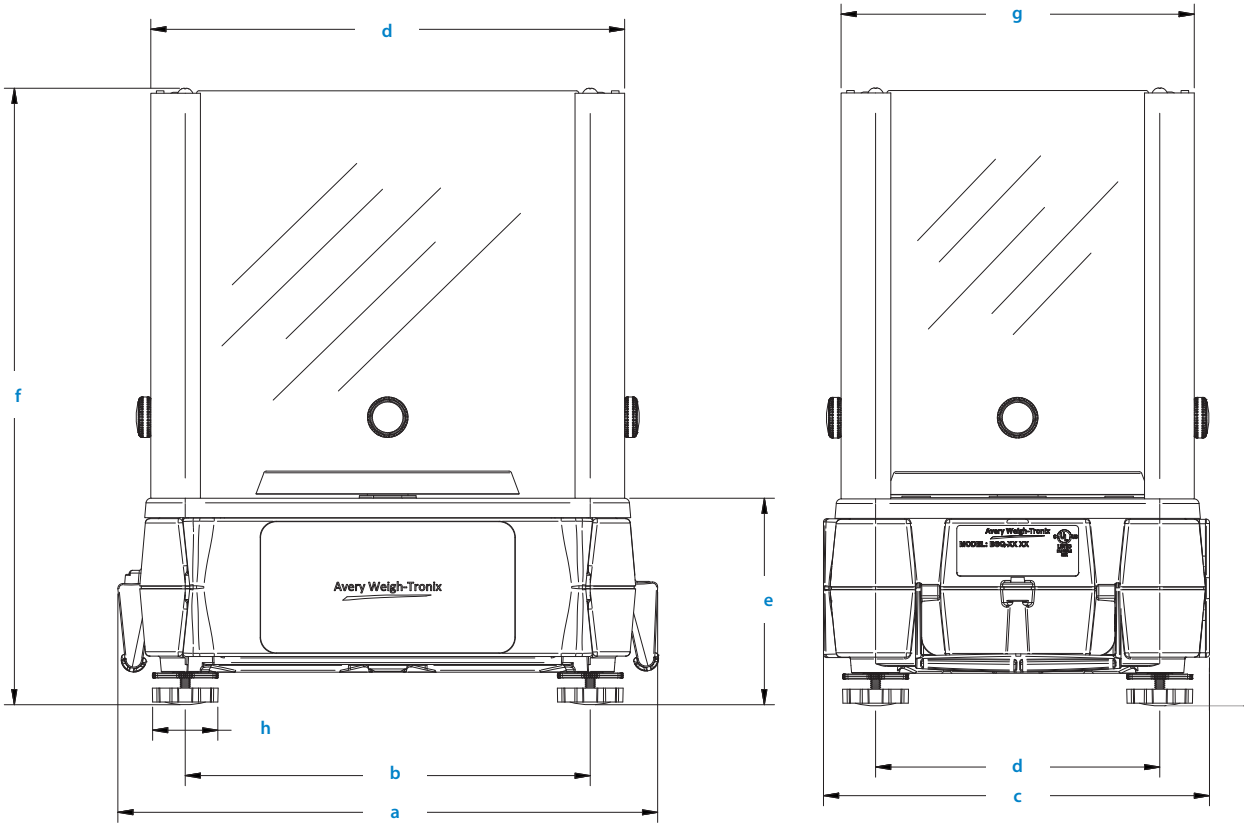

UNDERHOOK OPTION

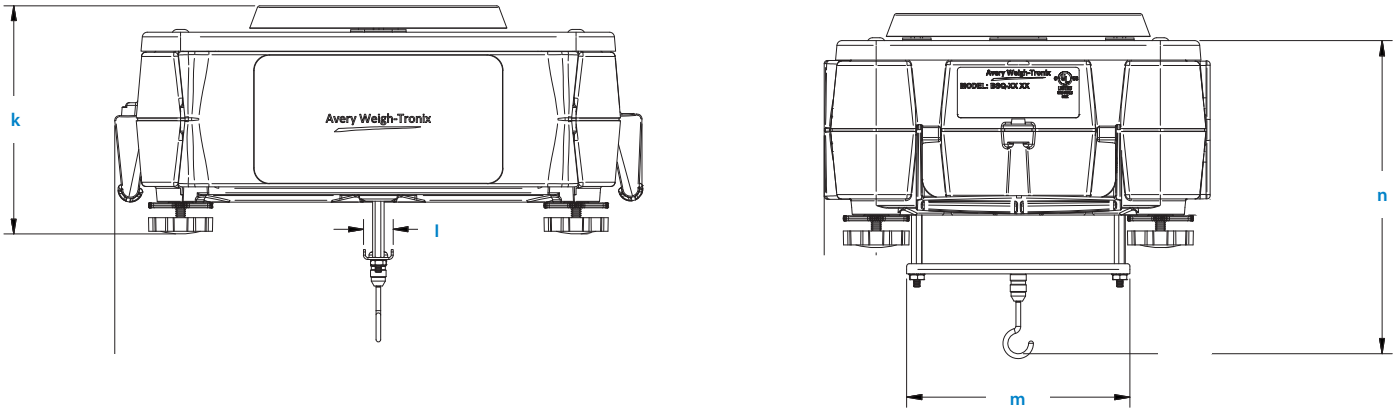

Avery Weigh-Tronix

www.averyweigh-tronix.com

Avery Weigh-Tronix is an ITW company

Avery Weigh-Tronix is a trademark of the Illinois Tool Works group of companies whose ultimate parent company is Illinois Tool Works Inc ("Illinois Tool Works"). Copyright © 2026 Illinois Tool Works. All rights reserved. This publication is issued to provide outline information only and may not be regarded as a representation relating to the products or services concerned. This publication was correct at the time of going to print, however Avery Weigh-Tronix reserves the right to alter without notice the specification, design, price or conditions of supply of any product or service at any time.

BSQ_1kg_5kg_spec_501587.indd
V3 AWT35-501587